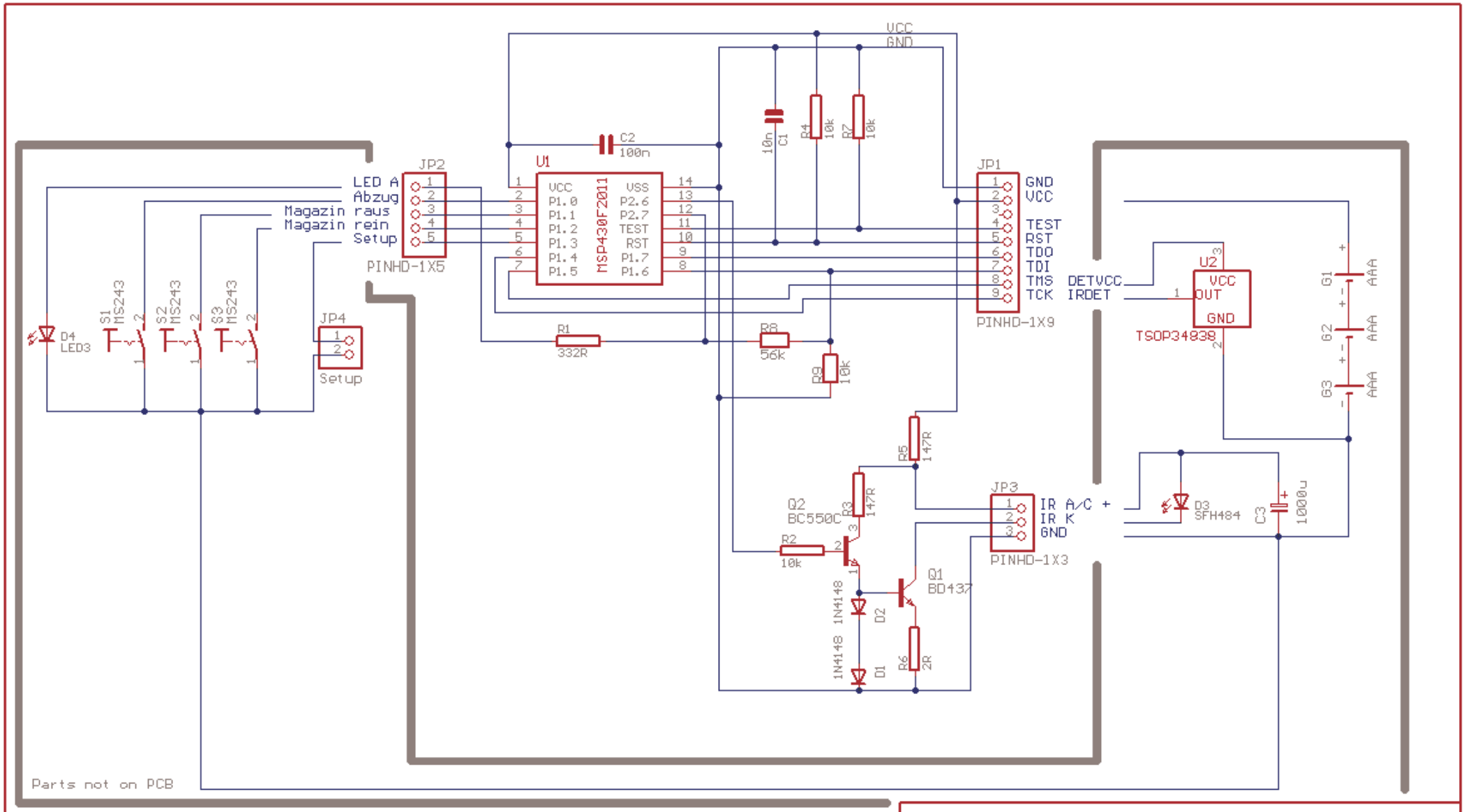

TITLE: Pistole_2

Document Number:

REV:

Date: 22.08.2010 13:31:04

Sheet: 1/1